TDL161

3-WHEEL DUAL-DRIVE COUNTERBALANCE FORKLIFT 1600KG

1600 kg | 6000 mm | 48 V Li-Ion

This 3 wheel forklift is ideal for a wide range of settings, including large warehouses, docks, side bay lorries, and logistics centers, delivering strong performance both indoors and outdoors.

Boosts productivity with its Li-ion heart and dual drive units, meeting the demands of intensive applications.

SPECIFICATION	REF	UNIT	VALUE
Battery type			Li-Ion
Battery nominal capacity K5		Ah	280
Battery voltage		V	48
Rated capacity	Q	kg	1600
Load centre distance	c	mm	500
Service weight		kg	3380
Height, mast lowered	h_1	mm	2075
Lift	h_3	mm	3000
Height, mast extended	h_4	mm	4058
Overall length	l_1	mm	2933
Overall width	b_1/b_2	mm	1050
Length to face of forks	l_2	mm	2013
Fork dimensions	s/e/l	mm	40X100X920
Turning radius	Wa	mm	1605
Manufacturer			EP
Model designation			TDL161

Copyright 2026 EP Equipment. All rights reserved. | Datasheet last updated 2026-03-27

Features

Hydraulic steering system with better human-vehicle interaction

The TDL series adopts the hydraulic steering system and this achieves more precise and responsive operation, which demonstrates better human-vehicle interaction. Plus, the hydraulic steering system comes with a simple and reliable structure with lower maintenance costs.

Electromagnetic joystick available for premium needs

For premium material handling, the electromagnetic joystick is available as an option which puts operation experience and productivity at the forefront. The joystick houses all controls of the truck and the operator are allowed to perform all functions in a palm-sized place with utmost precision.

Larger legroom to amplify driving comfort

The integrated design of the operator compartment is intended to create a larger operational space to improve ergonomics to reduce operator work-related health issues, as well as to improve operational efficiency.

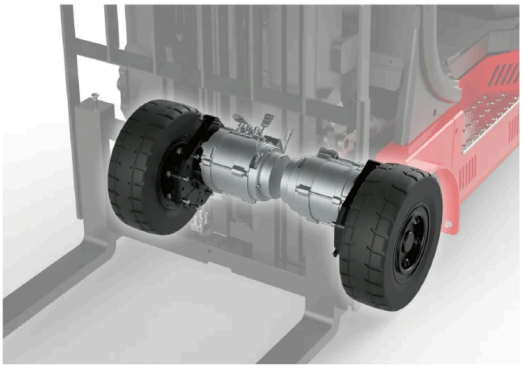

Powerful and constant working performance

The lithium battery with opportunity charging and 5.4kW*2 dual drive motors guarantee the TDL series operate at full power at all times with a permanently high performance. It comes with a 48V/50A integrated charger as standard for charging convenience and 48V/150A and 48V/200A external chargers available as options to better fit in your needs.

Copyright 2026 EP Equipment. All rights reserved. | Datasheet last updated 2026-03-27

Optimized truck frame for cabin installation and detachment

The TDL series features the streamlined design as the L2 series and an optimized one-piece truck frame, which is easy for cabin installation as well as detachment.

New informative LED display

The TDL series provides the high-resolution LED display which is installed at the upper right corner of the cabin. Via a glance, the operator is able to find speed, working hours, battery status ,miles driven and parking status. This informative and intuitive display ensures relaxed and safe working.

VDI Chart

	SPECIFICATION	REF	UNIT	VALUE
1.1	Manufacturer			EP
1.2	Model designation			TDL161
1.3	Drive			Electric
1.4	Operator type			Seated
1.5	Rated capacity	Q	kg	1600
1.6	Load centre distance	c	mm	500
1.8	Load distance, centre of drive axle to fork	x	mm	420
1.9	Wheelbase	y	mm	1358
2.1	Service weight		kg	3380
2.2	Axle loading, laden front/rear		kg	4153/827
2.3	Axle loading, unladen front/rear		kg	1468/1912
3.1	Tyres			Solid rubber
3.2	Tyre size, front		mm	18x7-8
3.3	Tyre size, rear		mm	140/55-9
3.5	Wheels, number front/rear (x=drive wheels)			2X/2
3.6	Tread width, front	b_{10}	mm	910

Copyright 2026 EP Equipment. All rights reserved. | Datasheet last updated 2026-03-27

	SPECIFICATION	REF	UNIT	VALUE
3.7	Tread width, rear	b_{11}	mm	210
4.1	Tilt of mast/fork carriage forward/backward		°	5/5
4.2	Height, mast lowered	h_1	mm	2075
4.3	Free lift	h_2	mm	100
4.4	Lift	h_3	mm	3000
4.5	Height, mast extended	h_4	mm	4058
4.7	Height of overhead guard (cabin)	h6	mm	2140
4.8	Seat height relating to SIP/stand height	h7	mm	1070
4.12	Coupling height	h10	mm	560
4.19	Overall length	l_1	mm	2933
4.20	Length to face of forks	l_2	mm	2013
4.21	Overall width	b_1/b_2	mm	1050
4.22	Fork dimensions	s/e/l	mm	40X100X920
4.23	Fork carriage ISO 2328, class/type A, B			2A
4.24	Fork carriage width		mm	1040
4.31	Ground clearance, laden, below mast		mm	86
4.32	Ground clearance, centre of wheelbase	m_2	mm	104
4.34.1	Aisle width for pallets 1000×1200 crossways	Ast	mm	3348
4.34.2	Aisle width for pallets 800 × 1200 lengthways	Ast	mm	3485
4.35	Turning radius	Wa	mm	1605
5.1	Travel speed, laden/unladen		km/h	15/16
5.2	Lift speed, laden/unladen		m/s	0.35/0.43
5.3	Lowering speed, laden/unladen		m/s	0.45/0.37
5.8	Max. gradeability, laden/unladen		%	15/17
5.10	Service brake			Electromagnetic
5.11	Parking brake			Electromagnetic
6.1	Drive motor rating S2 60 min		kW	5.4X2
6.2	Lift motor rating at S3 15%		kW	11
6.4	Battery nominal capacity K5		Ah	280
6.4	Battery voltage		V	48
6.4.1	Battery type			Li-Ion
6.5	Battery weight		kg	153
6.6	Energy consumption according to DIN EN 16796		kWh/h	5.55 [1)]
6.7	Turnover output according to VDI 2198			96

Copyright 2026 EP Equipment. All rights reserved. | Datasheet last updated 2026-03-27

	SPECIFICATION	REF	UNIT	VALUE
6.8	Turnover efficiency according to VDI 2198			18.05
8.1	Type of drive unit			AC
10.1	Operating pressure for attachments		bar	180
10.2	Oil volume for attachments		ℓ/min	25
10.5	Steering design			Hydraulic
10.7	Sound pressure level at the driver's seat		dB(A)	79
15.1	Charger output current		A	50

VDI Drawing

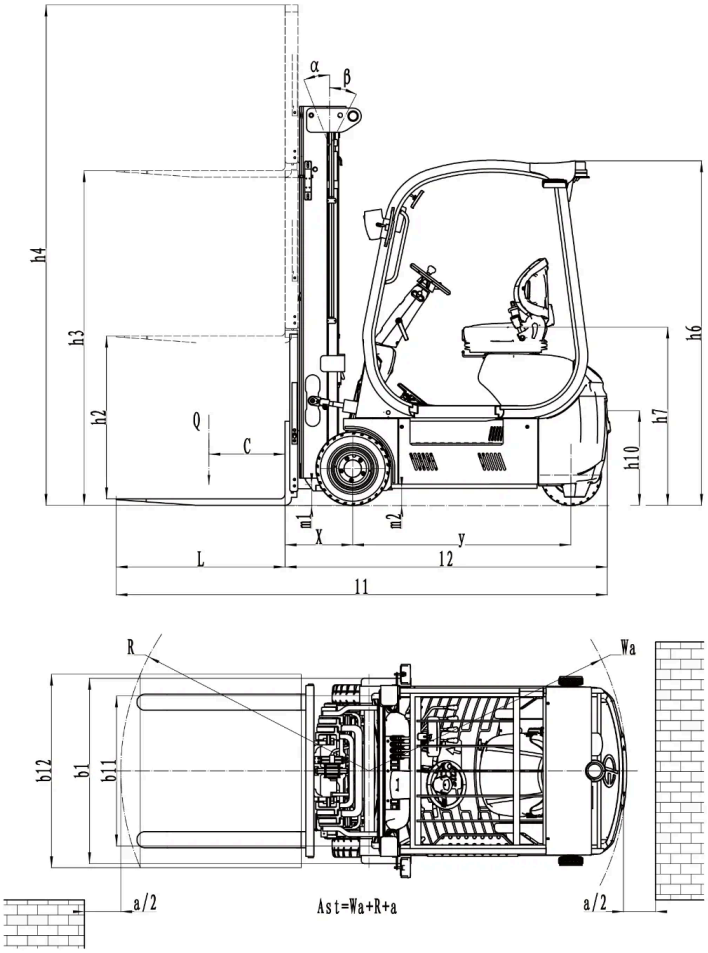

Copyright 2026 EP Equipment. All rights reserved. | Datasheet last updated 2026-03-27

RATED CAPACITIES AND LOAD CENTERES GRAPH

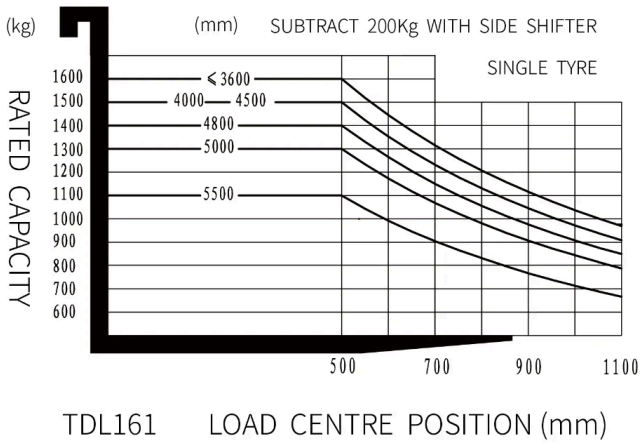

Mast Options

MAST TYPE	LIFT HEIGHT (H3, MM)	MAST LOWERED HEIGHT (H1, MM)	MAST EXTENDED HEIGHT, NO BACKREST (H4, MM)	MAST EXTENDED HEIGHT, WITH BACKREST (H4, MM)	FREE LIFT HEIGHT, NO BACKREST (H2, MM)	FREE LIFT HEIGHT, WITH BACKREST (H2, MM)
2-Standard Mast	3000	2075	3740	4055	100	100
2-Standard Mast	3600	2375	4340	4655	100	100
2-Standard Mast	4000	2455	4740	5055	100	100
2-Free Mast	3000	2075	3740	4055	1365	1050
2-Free Mast	3300	2225	4040	4355	1515	1200
2-Free Mast	3600	2375	4340	4655	1665	1350
2-Free Mast	4000	2625	4840	5155	1915	1600
3-Free Mast	4000	1940	4740	5055	1230	915
3-Free Mast	4350	2090	5090	5405	1380	1065
3-Free Mast	4500	2140	5240	5555	1430	1115
3-Free Mast	4800	2240	5540	5855	1530	1215
3-Free Mast	5000	2305	5740	6055	1595	1280
3-Free Mast	5500	2475	6240	6555	1765	1450
3-Free Mast	6000	2690	6740	7055	1980	1665

Copyright 2026 EP Equipment. All rights reserved. | Datasheet last updated 2026-03-27

Options

ITEM	OPTIONS (optional items marked in yellow)
Fork dimension	100*40*920 | 100*40*1070 | 100*40*1150 | 100*40*1200 | 100*40*1220 | 100*40*1370
Fork carriage width option	1040mm | Yes and can be customized
Fork carriage height option	1067mm (42in) | 1220mm (48in) | 1520mm (60in) | Yes and not customized
Front wheel material	Solid | Non-marking solid
Rear wheel material	Solid | Non-marking solid
Battery capacity	280Ah | 360Ah UL | 405Ah
Charger	48V-50A internal | 48V-150A external | 48V-200A external
Battery display indicator (BDI)	With hourmeter
Seat type	Regular | Premium | Suspension | KL01 with armrest
Attachments	No | Built-in sideshifter | External shifter | Fork positioner
Traction pin	Yes and not customized
Anti-static chain	Yes
Front lamp	LED
Rear lamp	No | LED
Blue lamp	No | 2 front | 1 rear | 2 front + 1 rear
Area warning lamp	No | Red, one on each side | Red, rear | Red, one on each side + one on the back"
Rearview mirror	1 rearview mirror | 2 rearview mirrors
Buzzer	Yes and not customized
OPS system	Yes and not customized
USB interface	No | Yes and not customized
Electronic scale with printer	Yes and not customized | No
Telematics	No | Yes and not customized
Cabin	None | Basic half cabin | Upgrade half cabin | Full cabin
Proportional lift system	No | Yes and not customized
Anti-static chain	Yes and not customized
Turn signal light	LED
Wiper water unit	No | Yes, only with cabin and not customized

Copyright 2026 EP Equipment. All rights reserved. | Datasheet last updated 2026-03-27